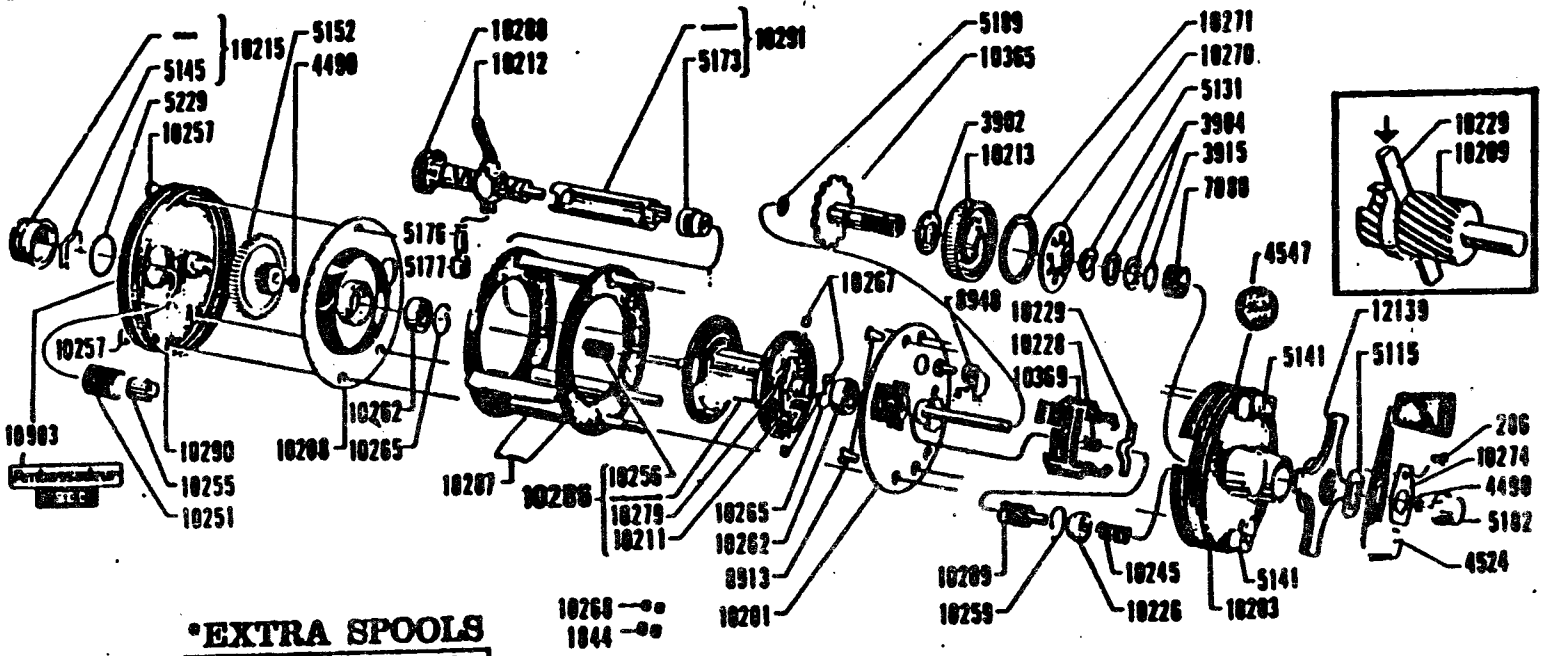

*EXTRA SPOOLS

Part No.	Code No.
10286	56229

1500 C
77 • 09 • 00

FROM 00000000000
.09.08.22 14:13